TrynEx International, LLC, 531 Ajax Drive, Madison Heights, MI 48071-2429 • www.snowexproducts.com

October 15, 2026
Lit. No. 52239, Rev. 06

SnowEx®

Automatixx®
ATTACHMENT SYSTEM

7600, 8000, 8600, 9000

Heavy Duty Snowplow

Blade Assembly
77720-1, 77725-1, 77730-1, 77735-1
Big Box Assembly 77820

Parts List

AUTHENTIC SnowEx® PARTS & ACCESSORIES

A DIVISION OF DOUGLAS DYNAMICS, LLC

TABLE OF CONTENTS

HEAVY DUTY BLADE ASSEMBLY 4

A-FRAME ASSEMBLY 6

HEADGEAR ASSEMBLY 8

HYDRAULIC AND ELECTRICAL COMPONENTS 10

- Hydraulic Unit 10
- Lift and Angle Rams 12
- Hoses and Fittings 12
- Electrical Components 13

VEHICLE-SIDE HARNESS DIAGRAM 14

HEADLAMPS 15

Blade Components

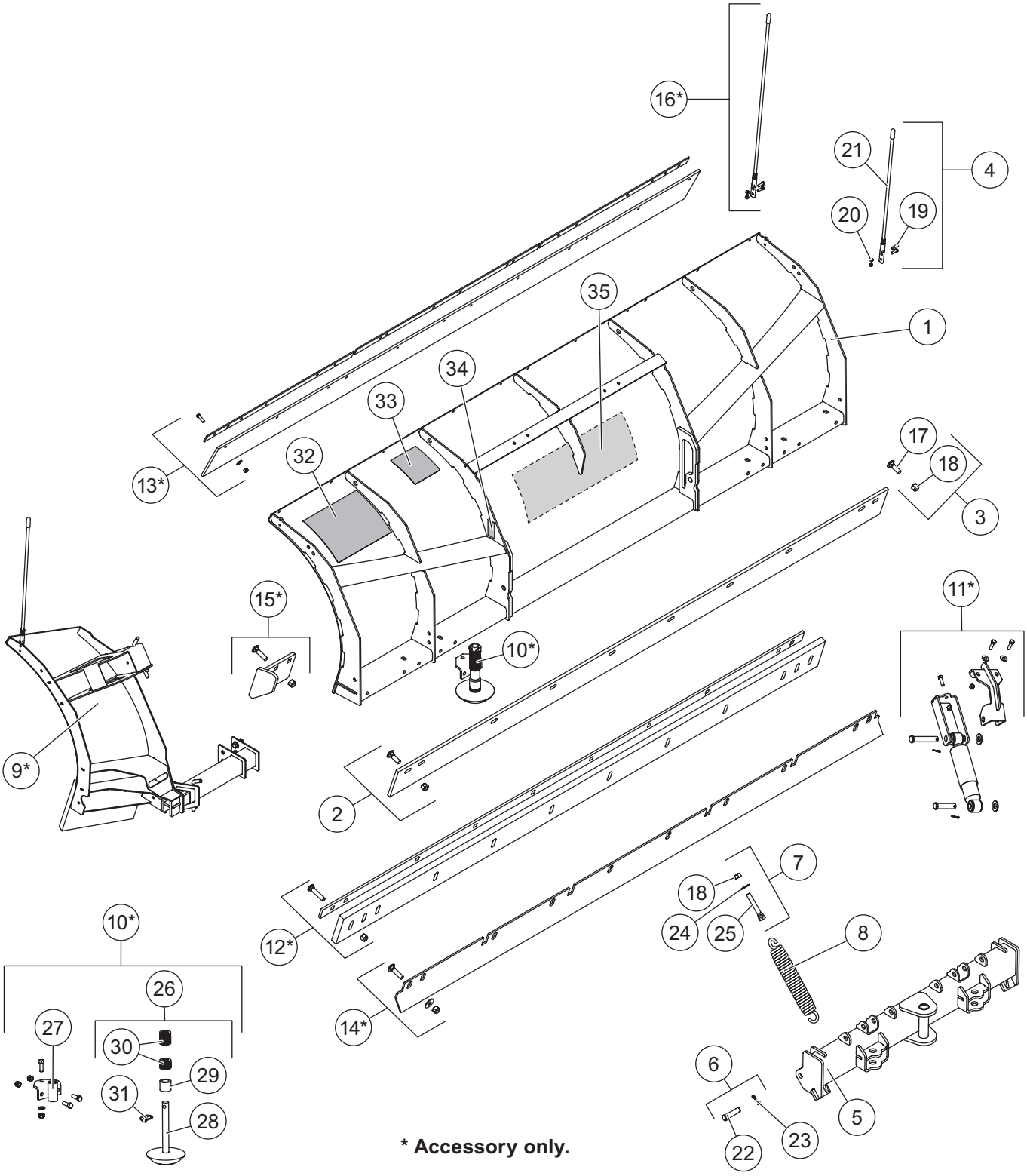

*** Accessory only.**

HEAVY DUTY BLADE ASSEMBLY

77720-1/77725-1/77730-1/77735-1 Blade Components							
Item	**Part**	**Qty**	**Description**	**Item**	**Part**	**Qty**	**Description**
1	84567-1	1	7600HD Blade w/Labels	11*†	84563	1	Accessory Shock Absorber Kit (set of 2)
	84566-1	1	8000HD Blade w/Labels				
	84565-1	1	8600HD Blade w/Labels	12*	84530	1	Rubber Cutting Edge Kit – 7'6"
	84564-1	1	9000HD Blade w/Labels		84531	1	Rubber Cutting Edge Kit – 8'
2	40695	1	1/2 Steel Cutting Edge Kit – 7600HD		84532	1	Rubber Cutting Edge Kit – 8'6"
	40696	1	1/2 Steel Cutting Edge Kit – 8000HD		84533	1	Rubber Cutting Edge Kit – 9'
	40697	1	1/2 Steel Cutting Edge Kit – 8600HD	13*	84514	1	Rubber Deflector Kit – 7'6"
	40698	1	1/2 Steel Cutting Edge Kit – 9000HD		84517	1	Rubber Deflector Kit – 8', 8'6", 9'
3	48765	1	Cutting Edge Bolt Bag HD	14*	84463	1	Back Drag Edge – 7'6"
4	84525	1	24" Blade Guide Kit (set of 2)		84464	1	Back Drag Edge – 8'
5	84576	1	Quadrant HD		84466	1	Back Drag Edge – 8'6"
6	41123	2	3/4 x 3 Clevis Pin Kit with Cotter		84465	1	Back Drag Edge – 9'
7	84702	4	Eyebolt Kit	15*	43885	1	Curb Guard Kit
8	23039	4	Trip Spring	16*	84477	1	36" Poly Blade Guide Kit (set of 2)
9*	84575	1	Accessory Wing Kit – HD	ns	84642	1	Blade Label Kit
10*	84506-1	1	Shoe Assembly Kit – HD, RD, LT				
Item 2			**40695/40696/40697/40698 1/2 Steel Cutting Edge Kit**				
		1	1/2 Steel Cutting Edge	3	48765	1	Cutting Edge Bolt Bag
Item 3			**48765 Cutting Edge Bolt Bag HD**				
17		10	5/8-11 x 2 Carriage Bolt G5	18		10	5/8-11 Hex Locknut GB
Item 4			**84525 24" Blade Guide Kit**				
19		4	5/16-18 x 1 Hex Cap Screw G5	21		2	24" Poly Blade Guide with Label
20		4	5/16-18 Hex Locknut GB				
Item 6			**41123 3/4 x 3 Clevis Pin Kit with Cotter**				
22		2	3/4 x 3 Clevis Pin	23		2	1/4 x 1-1/2 Cotter Pin
Item 7			**84702 Eyebolt Kit**				
18		1	5/8-11 Hex Locknut GB	25		1	5/8-11 x 4 Eyebolt
24		1	5/8 Hardened Flat Washer				
Item 10*			**84506-1 Shoe Assembly Kit – HD, RD, LT**				
26	42301	2	Disc Shoe Assembly	ns	84732	1	Bolt Bag – 84506 Shoe Assembly
27	84736	2	Shoe Bracket				
Item 26			**42301 Shoe Assembly Kit – HD, RD, LT**				
28	60217	2	Disc Shoe	30	91192	48	Round Flat Washer, Special
29	60045	2	Spacer	31	93010	2	7/16 x 1-3/4 Linchpin
			84642 Blade Label Kit				
32	52203	1	Label – Attach/Detach, Automatixx®	34	29256	1	Label – Warning, Foot Crush Hazard
33	59900	1	Label – Warning/Caution, Snowplows	35	77703	1	Label – Logo, HD Blade Center
			ns = not shown				G = Grade

* Accessory only.

† Fits only blades with serial number beginning 160209 or higher.

A-Frame Components

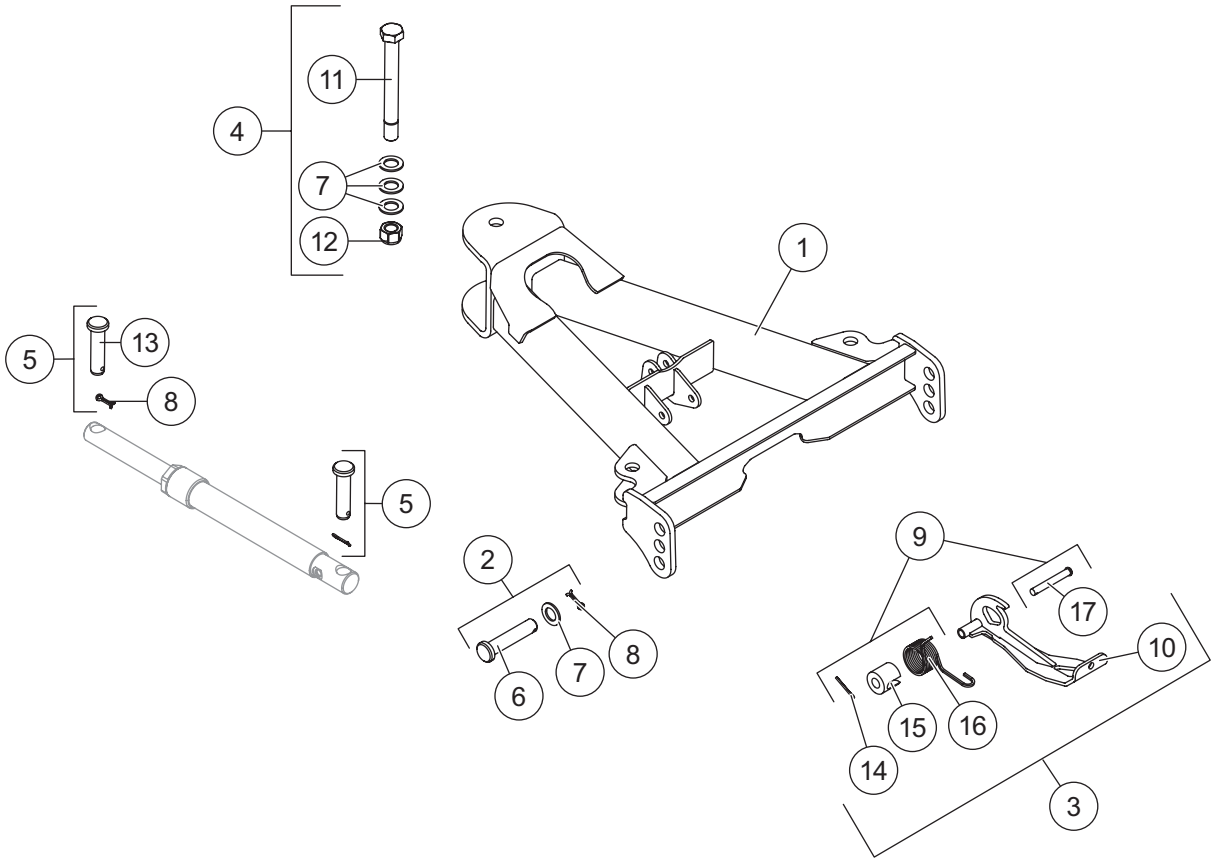

A-FRAME ASSEMBLY

A-Frame Components							
Item	**Part**	**Qty**	**Description**	**Item**	**Part**	**Qty**	**Description**
1	84589	1	A-Frame	4	84769	1	Pivot Bolt Kit
2	84623	2	A-Frame Pin Kit	5	57968	4	1 x 4 Clevis Pin Kit
3	84593	1	Stand Kit				
Item 2			**84623 A-Frame Pin Kit**				
6		1	1 x 4-3/4 Clevis Pin	8		1	1/4 x 1-1/2 Cotter Pin
7		1	1" Flat Washer Special				
Item 3			**84593 Stand Kit**				
9	84615	1	Stand Hardware Kit	10		1	Stand
Item 4			**84769 Pivot Bolt Kit**				
7		3	1" Flat Washer Special	12		1	1-8 Hex Locknut GB
11		1	1-8 x 9 Hex Cap Screw Special G5				
Item 5			**57968 1/4 x 4 Clevis Pin Kit**				
8		1	1/4 x 1-1/2 Cotter Pin	13		1	1 x 4 Clevis Pin
Item 9			**84615 Stand Hardware Kit**				
14		1	5/32 x 1-1/2 Cotter Pin	16		1	Stand Torsion Spring
15		1	Stand Spring Spacer	17		1	1/2 x 3-11/16 Clevis Pin
G = Grade							

Headgear Components

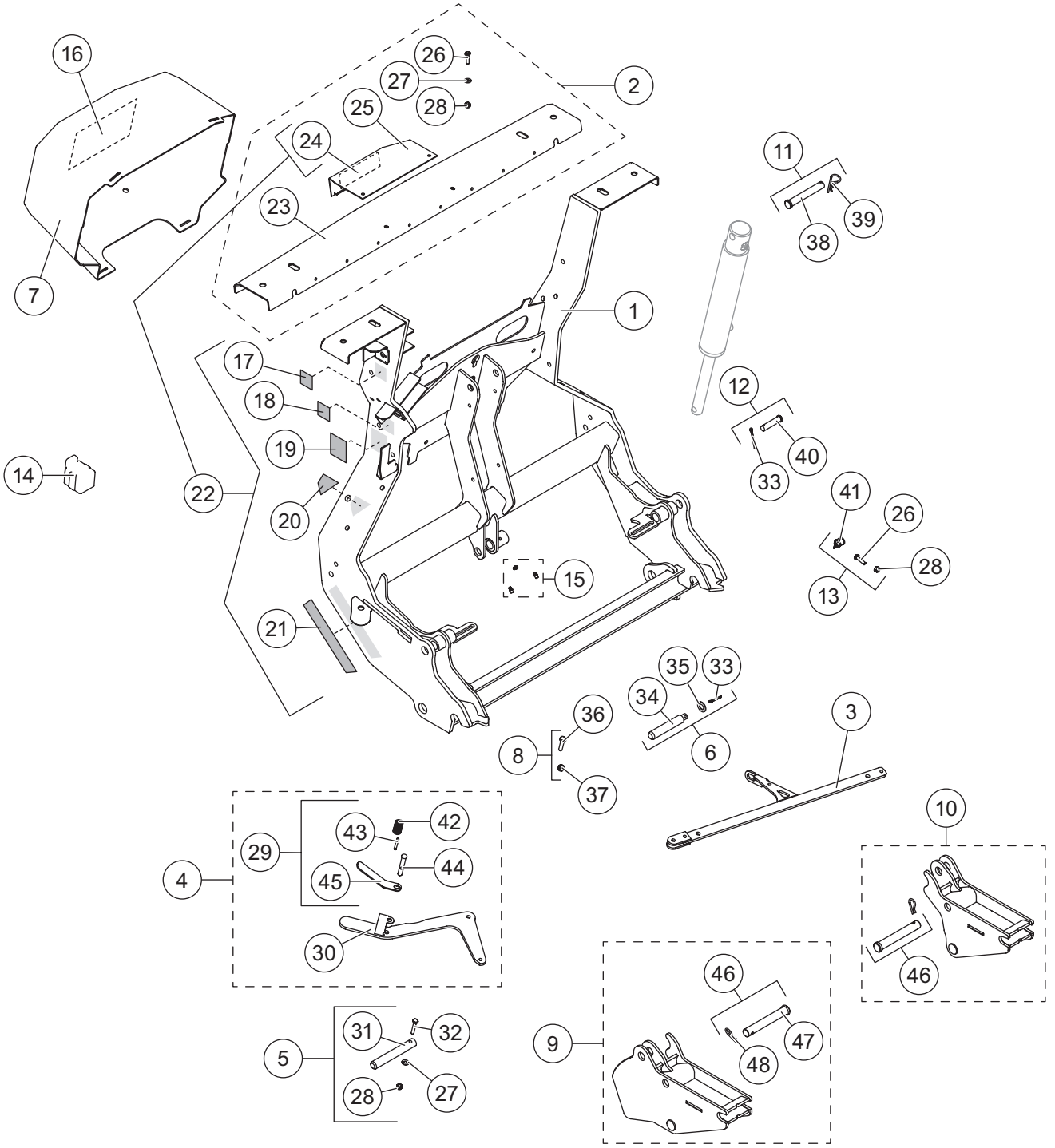

HEADGEAR ASSEMBLY

Headgear Components							
Item	**Part**	**Qty**	**Description**	**Item**	**Part**	**Qty**	**Description**
1	84622	1	Headgear (incl. item 15)	11	84632	1	Lift Ram Base Pin Kit
2	84624	1	Light Bar Channel	12	84627	1	Lift Ram Rod Pin Kit
3	84599	1	Link Arm	13	84778	1	Clamp Loop Kit
4	84595	1	Attach Handle Kit	14	61246	1	Cable Boot
5	84603	2	Attach Pin Kit	15	84616	1	Grease Zerk (3-pack)
6	84601	1	Link Arm Jack Stand Pin Kit	16	43859	1	Label – Hydraulic Info, Straight Blades
7	84649	1	Hydraulic Cover – HD (incl. item 16)	17	52206	1	Label – Power Switch, Automatixx®
8	84635	1	Link Arm/Attach Handle Fastener Kit	18	52207	1	Label – Operation Switch, Automatixx
9	84608	1	Receiver Kit, DS (incl. item 46)	19	69689	1	Label – Logo, SECURITY GUARD™
ns	85121*	1	Receiver Kit, Tall – DS	20	77717	1	Label – Logo, Automatixx, Upper
10	84609	1	Receiver Kit, PS (incl. item 46)	21	77719	1	Label – Logo, Automatixx, Lower
ns	85122*	1	Receiver Kit, Tall – PS	22	84647	1	Headgear Label Kit
Item 2			**84624 Light Bar Channel**				
23		1	Light Bar	26		2	1/4-20 x 1 Hex Cap Screw G5
24	77727	1	Label – SnowEx® Light Bar, Center	27		2	1/4 Flat Washer
25		1	Light Bar Top Plate, Center	28		2	1/4-20 Hex Locknut GB
Item 4			**84595 Attach Handle Kit**				
29	84596	1	Attach Handle Release Cam Kit	30	84779	1	Handle
Item 5			**84603 Attach Pin Kit**				
27		1	1/4 Flat Washer	31		1	Hitch Pin
28		1	1/4-20 Hex Locknut GB	32		1	1/4-20 x 1-1/2 Hex Cap Screw SS
Item 6			**84601 Link Arm Jack Stand Pin Kit**				
33		1	5/32 x 1-1/2 Cotter Pin	35		1	1/2 Flat Washer Type B Narrow SS
34		1	Stand Actuator Pin				
Item 8			**84635 Link Arm/Attach Handle Fastener Kit**				
36		1	5/16-18 x 1-1/4 Hex Cap Screw G5	37		1	5/16-18 Hex Locknut GB
Item 11			**84632 Lift Ram Base Pin Kit**				
38		1	5/8 x 4-1/4 Clevis Pin	39		1	1/8 Hairpin Cotter
Item 12			**84627 Lift Ram Rod Pin Kit**				
33		1	5/32 x 1-1/2 Cotter Pin	40		1	1/2 x 2-1/8 Clevis Pin HT
Item 13			**84778 Clamp Loop Kit**				
26		1	1/4-20 x 1 Hex Cap Screw G5	41		1	#10 Clamp Loop
28		1	1/4-20 Hex Locknut GB				
Item 22			**84647 Headgear Label Kit**				
17	52206	1	Label – Power Switch, Automatixx	20	77717	1	Label – Automatixx, Upper
18	52207	1	Label – Operation Switch, Automatixx	21	77719	1	Label – Automatixx, Lower
19	69689	1	Label – Logo, SECURITY GUARD	24	77727	1	Label – SnowEx Light Bar, Center
Item 29			**84596 Attach Handle Release Cam Kit**				
42		1	Stand Lock Pin Spring	44		1	Handle Lock Pin
43		1	3/16 x 1-3/8 Roll Pin SS	45		1	Handle Lock Pin Lever
Item 46			**84611 Receiver Pin Kit – HD**				
47	95739	1	3/4 x 5 Clevis Pin HT	48	42142	1	R-Pin Cotter
ns = not shown			SS = Stainless Steel	HT = Heat Treated			G = Grade

* Refer to the Heavy Duty Snowplow Installation Instructions to confirm when tall receivers are required.

Hydraulic Unit Components

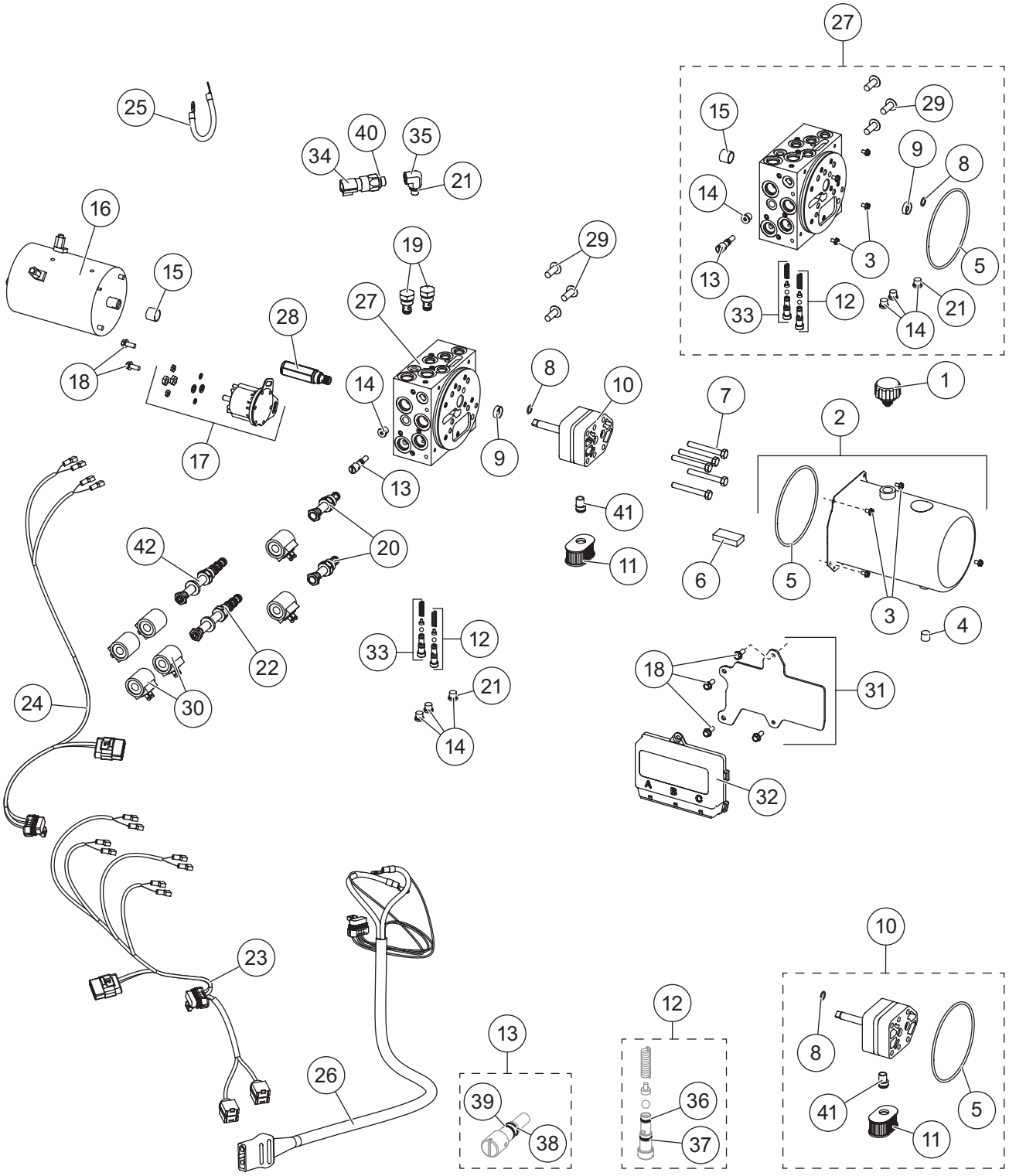

52646 Hydraulic Unit							
Item	**Part**	**Qty**	**Description**	**Item**	**Part**	**Qty**	**Description**
1	48278	1	Breather	22	52285	1	Valve, 4-Way, 3-Position Closed Center
2	52289	1	Reservoir Kit				
3	66607	4	#10-24 x 5/16 Machine Screw	23	52108	1	Plow Control Harness, 4-Coil
4	92079	1	Plug, Square 3/8 NPTF	24	52077	1	Plow Control Harness, 2-Coil
5	66519	1	O-Ring 2-250	25	29071	1	Vehicle Battery Cable 8"
6	73897	1	Magnet	26	52291	1	Snowplow Battery Cable
7	90073	5	5/16-18 x 2-1/4 Hex Cap Screw G5	27	52256	1	Manifold Assembly w/o Valves HD
8	56274	1	O-Ring -013	28	42889	1	Relief Valve 4000 psi
9*	66515	1	Pump Shaft Seal	29	98043	3	3/8-16 x 1 Button Cap Screw
ns	52252	1	Seal Repair Tool Kit w/Seal	30	52294	6	Coil
10	52288	1	Hydraulic Pump Kit	31	52293	1	Plate, Module
11	48281	1	Filter	32	52292-2	1	Module, Plow Control
12	52282	1	Relief Valve (1 set)	33	52284	1	Relief Valve (1 set)
13	48517	1	Quill	34	52296	1	Pressure Switch
14	44344	4	Plug, Hex Socket –4 M ORB	35	52295	1	Elbow, 90° –4 M ORB/–6 F ORB
15†	56364	1	Bearing Sleeve	36	55371	2	O-Ring -008
ns	52251	1	Bearing Repair Tool Kit w/Bearing	37	25731	2	O-Ring -010
16	52281	1	Motor	38	48239	1	O-Ring -106
17	52290	1	Motor Relay Kit, FLEET FLEX	39	48240	1	Back-Up Ring -106
18	44355	6	1/4-20 x 5/8 Hex Washer-Head Thread-Rolling Screw	40	56569	5	O-Ring -906
				41	10887	1	Inlet Fitting
19	84934	2	Check Valve	42	84937	1	Valve, 4-Way, 3-Position
20	84936	2	Valve, 2-Way NC w/Rev Flow	ns		3	Fuse, 5A Mini Automotive Blade-Style (for items 25 and 26)
21	44343	5	O-Ring -904				
O-Ring Service Kits							
–	52298	–	O-Ring Kit	–	48310	–	Seal Kit, 2-Way Valves
–	48309	–	Seal Kit, 3-Way & 4-Way Valves				
Item 2			**52289 Reservoir Kit**				
3	66607	4	10-24 x 5/16 Machine Screw	5	66519	1	O-Ring 2-250
4	92079	1	Plug, Square 3/8 NPTF				
Item 27			**52256 Manifold Assembly w/o Valves HD**				
3	66607	4	#10-24 x 5/16 Machine Screw	14	44344	4	Plug, Hex Socket –4 M ORB
5	66519	1	O-Ring 2-250	15†	56364	1	Bearing Sleeve
8	56274	1	O-Ring -013	21	44343	5	O-Ring -904
9	66515	1	Pump Shaft Seal	29	98043	3	3/8-16 x 1 Button Cap Screw
12	52282	1	Relief Valve (1 set)	33	52284	1	Relief Valve (1 set)
13	48517	1	Quill				
ns = not shown			M = Male		F = Female		G = Grade

* Use 52252 tool to install.

† Use 52251 tool to install.

Go to *www.snowexproducts.com* for hydraulic unit service information and specifications.

Lift and Angle Ram Components

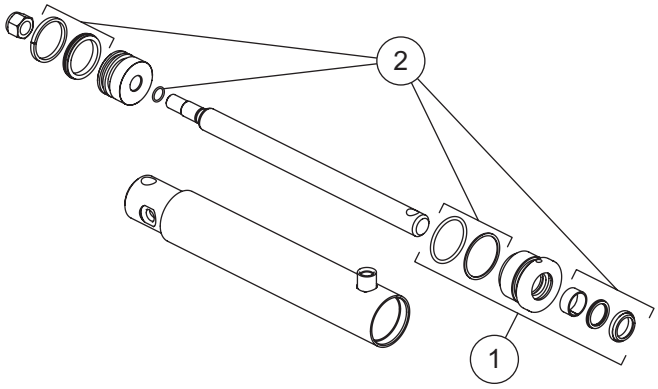

90910 Lift Ram Assembly 2 x 9-3/4 DA (Black) 84420* Lift Ram Assembly 2 x 9-3/4 DA (Red)			
Item	**Part**	**Qty**	**Description**
1	49499	1	1" Gland Assembly
2	48520	1	Seal Kit 2" DA Ram

* Discontinued

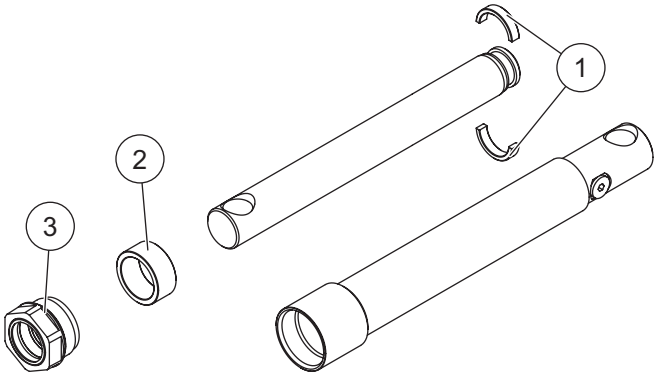

100259 Angle Ram Assembly 1-1/2 x 12 (Black) 84421* Angle Ram Assembly 1-1/2 x 12 (Red)			
Item	**Part**	**Qty**	**Description**
1	57879	1	Split Bearing Kit
2	56537	1	Spacer
3	48985	1	Gland Nut Assembly

* Discontinued

Hoses and Fittings

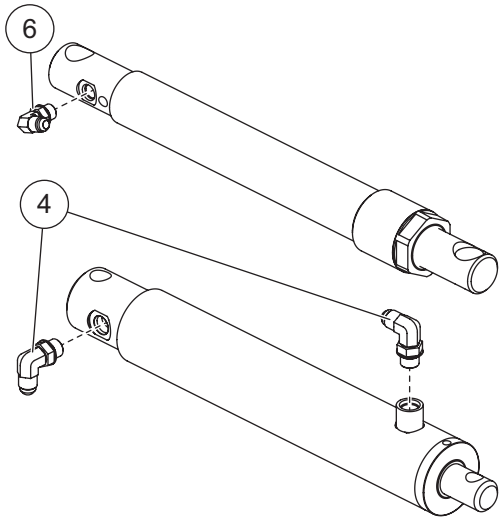

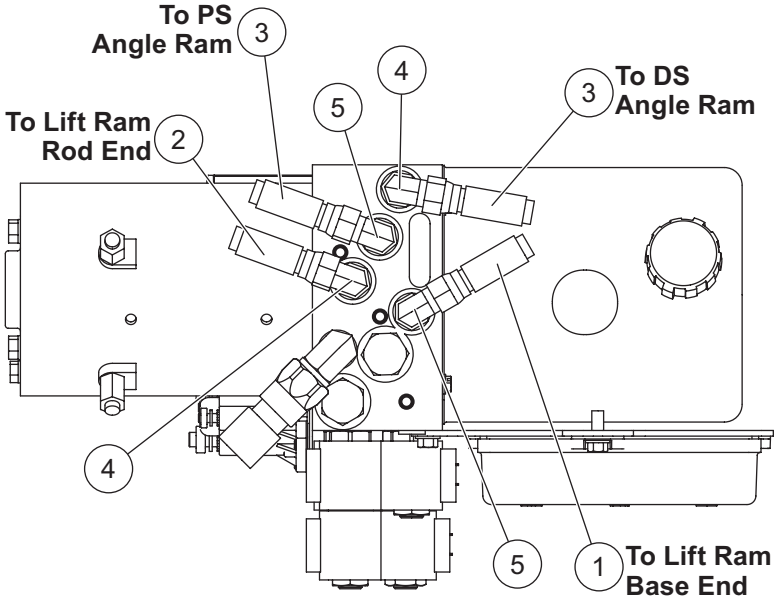

Hoses and Fittings							
Item	**Part**	**Qty**	**Description**	**Item**	**Part**	**Qty**	**Description**
1	84446	1	Hose, 1/4 x 14 w/F JIC Ends	5	40572	2	Elbow, Extra Long 90° –6 M JIC/–6 M ORB
2	84453	1	Hose, 1/4 x 20 w/F JIC Ends				
3	52304	2	Hose, 3/8 x 36 w/F JIC Ends	6	77929	1	Elbow, 90° –6 M JIC/–6 M ORB w/Screen
4	40571	5	Elbow, 90° –6 M JIC/–6 M ORB				
ns	56823	1	Hose Wrap				
F = Female			ns = not shown				M = Male

Electrical Components

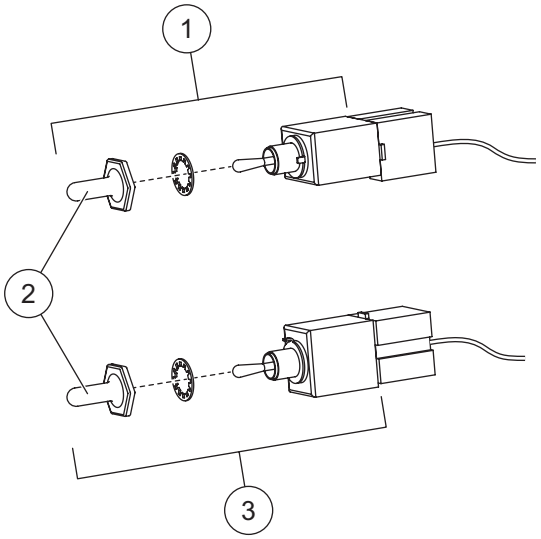

Plow-Side Electrical Components							
Item	**Part**	**Qty**	**Description**	**Item**	**Part**	**Qty**	**Description**
1	40575	1	Toggle Switch (MOM-ON, OFF, ON)	3	40576	1	Toggle Switch (MOM-ON, OFF, MOM-ON)
2	48259	2	Switch Boot				
Vehicle-Side Electrical Components							
*	72527	1	Vehicle Battery Cable	ns	48325	2	Plug Cover
*	28587	1	Vehicle Control Harness				
ns = not shown							

* For diagram see Vehicle-Side Harness Diagram.

Vehicle-Side Harness Diagram

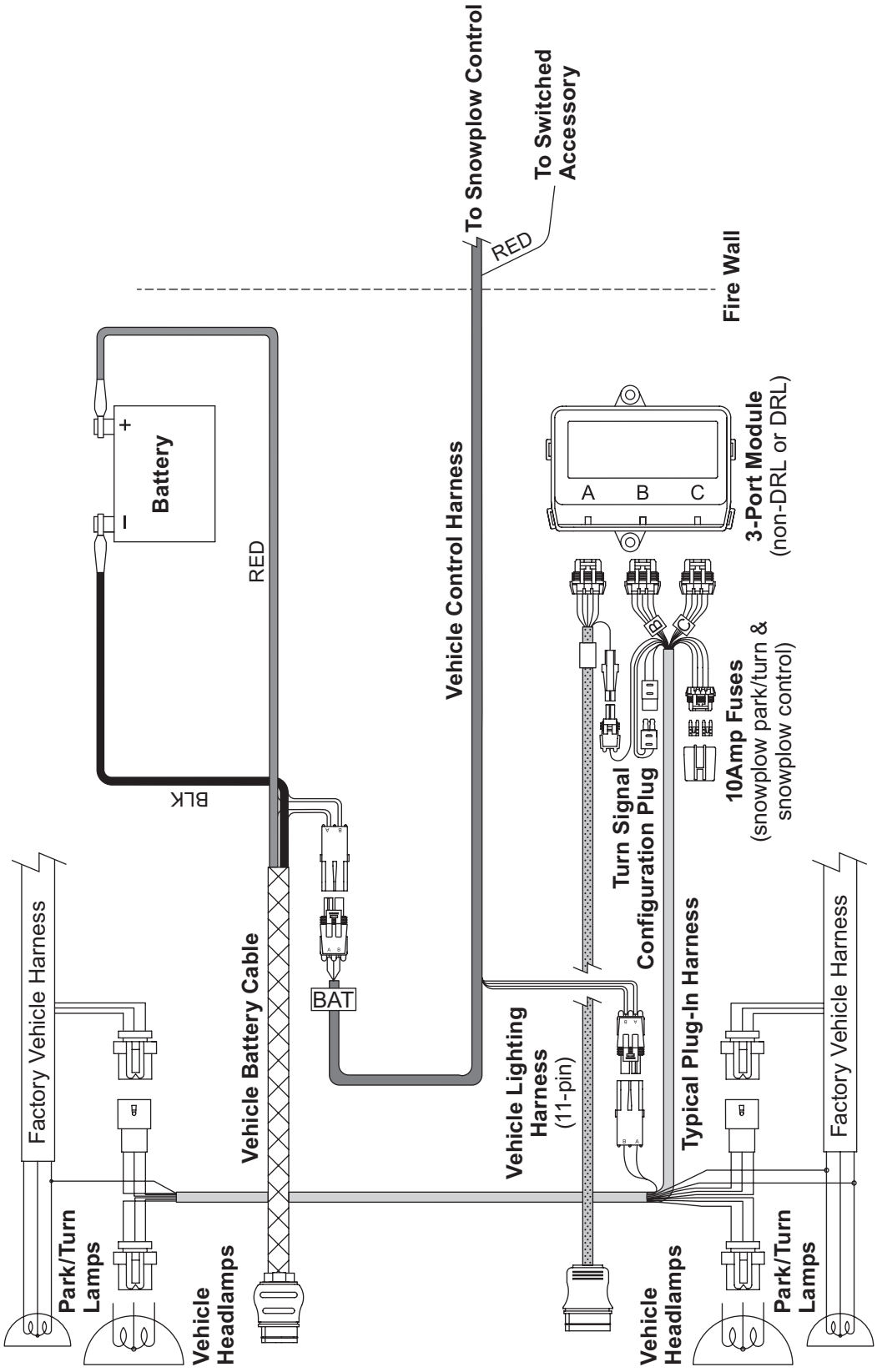

Headlamp Components

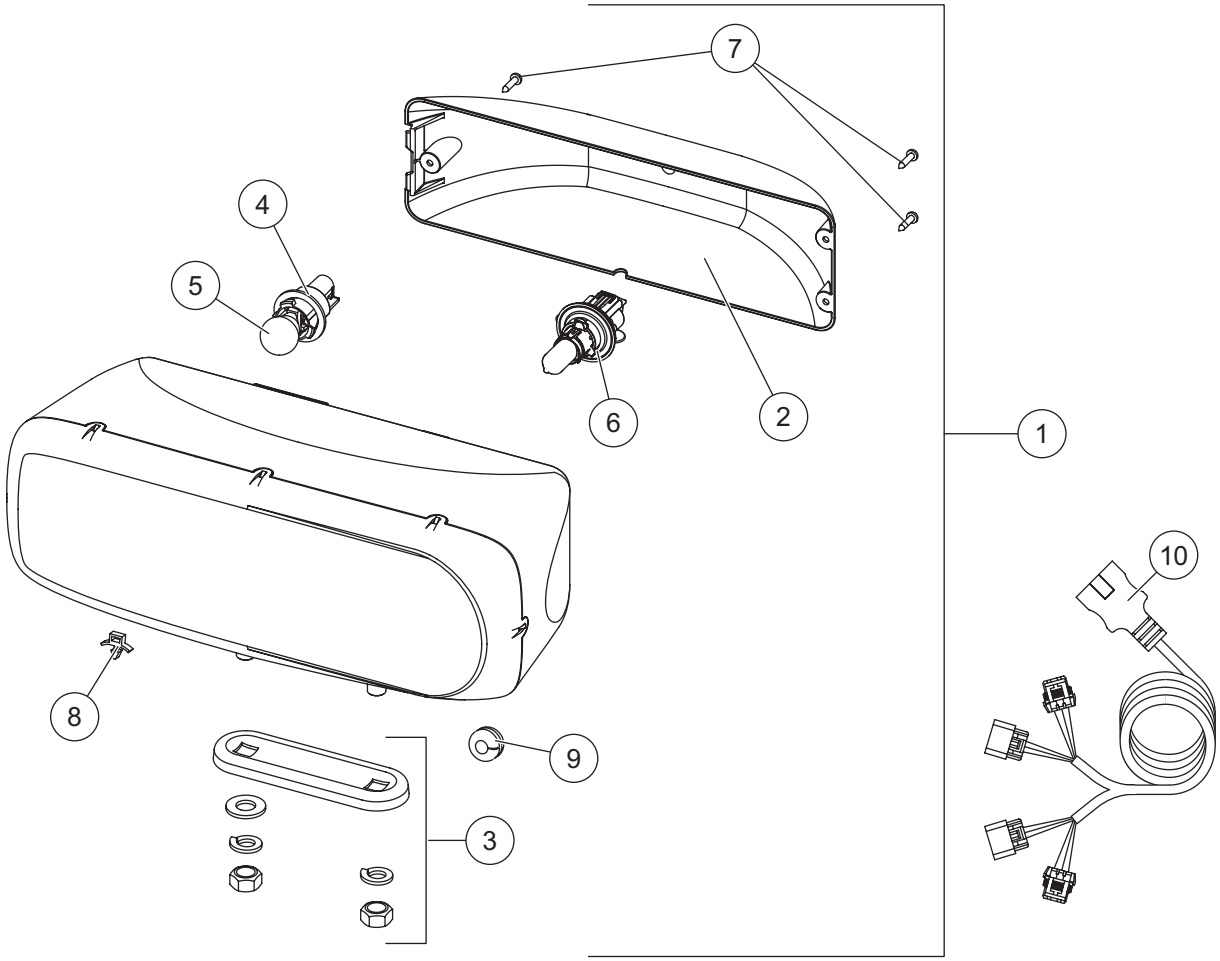

28800-1 Headlamp Kit (pair)							
Item	**Part**	**Qty**	**Description**	**Item**	**Part**	**Qty**	**Description**
1	28802-1	1	Headlamp Service Kit – PS	6	28806	2	Headlamp Bulb Service Kit H13
ns	28801-1	1	Headlamp Service Kit – DS	7	28808-1	2	Cover Screws Service Kit (3 screws)
2	28803-1	2	Rear Cover Kit (fits 2- or 3-screw)	8	56595	6	Cable Anchor Tie
3	28804	2	Mounting Hardware Kit	9	66130	2	Rubber Grommet
4	28805	2	Park/Turn Socket Service Kit	10	28213K	1	Harness Service Kit
5		2	Park/Turn Bulb (trade no. 4157NAK)				
ns = not shown							

TrynEx International, LLC
531 Ajax Drive
Madison Heights, MI 48071-2429
www.snowexproducts.com

A DIVISION OF DOUGLAS DYNAMICS, LLC

Copyright © 2026 Douglas Dynamics, LLC. All rights reserved. This material may not be used, reproduced, or copied in any manner, in whole or in part, in any printed, mechanical, electronic, film, or other distribution and storage media, nor analyzed or manipulated in any manner for the purpose of training artificial intelligence technologies or systems, without the written consent of TrynEx International, LLC. In accordance with Article 4(3) of the Digital Single Market Directive 2019/790, TrynEx International expressly reserves this work from the text and data mining exception. Authorization to photocopy items for internal or personal use by TrynEx International outlets or equipment owner is granted.

TrynEx International reserves the right under its product improvement policy to change construction or design details and furnish equipment when so altered without reference to illustrations or specifications used. TrynEx International or the vehicle manufacturer may require or recommend optional equipment for [snow removal/spreaders/sprayers]. Do not exceed vehicle ratings with a snowplow. TrynEx International offers a limited warranty for all equipment and accessories. See separately printed page for this important information. The following are registered (®) or unregistered (™) trademarks of Douglas Dynamics, LLC: Automatixx®, SECURITY GUARD™, SnowEx®.

Printed in U.S.A.